NPT National taper pipe threads

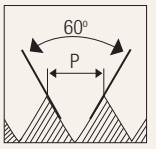

HSS | CS | BS 1127 | 2A

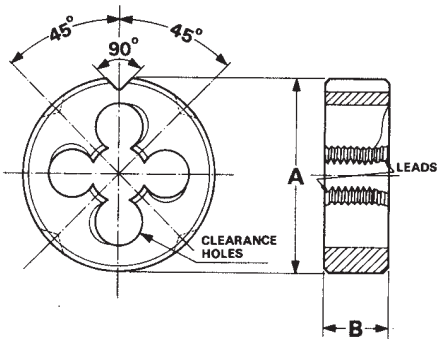

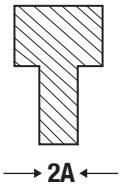

Unit : mm

Nominal Diameter	TPI	Outer Diameter	HSS	Carbon Steel	Thickness	No. Clearance Hole	Threading Diameter
ØD		A	EDP No.	EDP No.	B		
1/8"	27	1"	FBM2300162	FBM2300449	10	4	
1/8"	27	1.1/2"	FBM2300163	FBM2300450	10	4	
1/4"	18	1.1/2"	FBM2300164	FBM2300453	15	4	
3/8"	18	1.1/2"	FBM2300165	FBM2300456	15	5	
3/8"	18	2"	FBM2300166	FBM2300457	14	5	
1/2"	14	2"	FBM2300167	FBM2300459	19	5	
3/4"	14	2"	FBM2300168	FBM2300461	20	6	
3/4"	14	2.1/2"	FBM2300169	FBM2300462	22	6	
1"	11.1/2	2.1/2"	FBM2300171	FBM2300464	25	6	
1"	11.1/2	3"	FBM2300172	FBM2300465	25	6	
1.1/4"	11.1/2	3"	FBM2300173	FBM2300467	25	6	
1.1/2"	11.1/2	4"	FBM2300174	FBM2300468	25	6	
2"	11.1/2	4"	FBM2300175	FBM2300469	27	6	